TEAR SHEET

Calvino X-Large Radial Chandelier
Item # S 5694PN-CG

Designer: Ian K. Fowler

O/A Height: 55.5"
Fixture Height: 13.5"
Min. Custom Height: 21.25"
Width: 42"
Canopy: 4.5" Round
Finishes: AI/HAB, HAB, PN
Glass Options: CG
Socket: Dedicated LED
Wattage: 23w (1750lm)
Weight: 11 Pounds

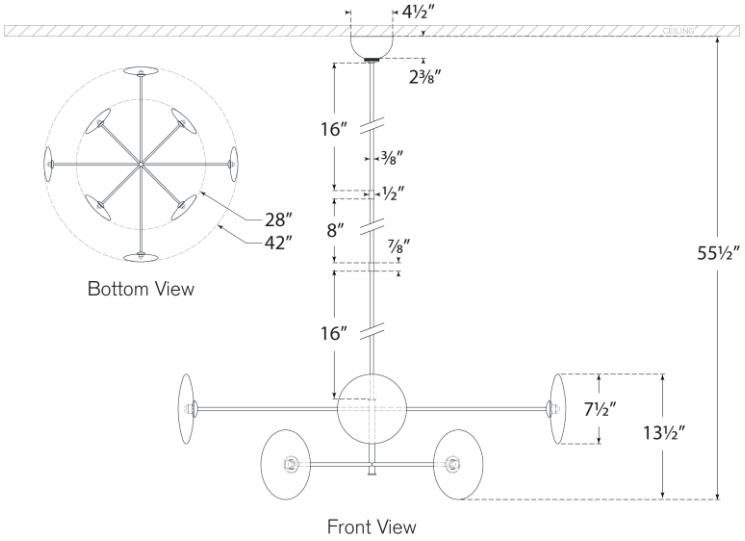

VISUAL COMFORT

DAMP LED 4